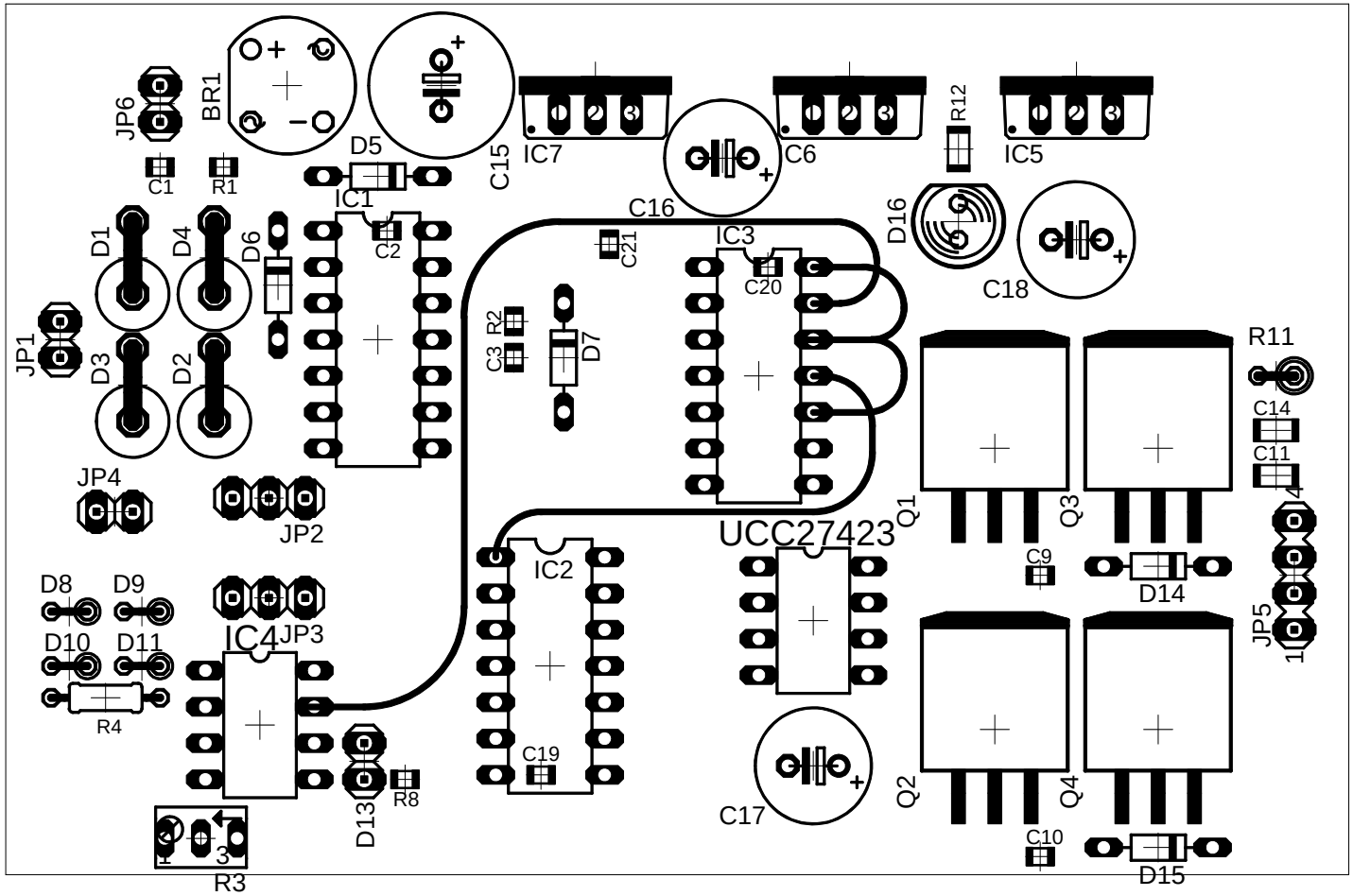

2/11/2009 06:36:01p f=2.00 C:\eagle files\drsstc\1.0\DRSSTC_pndriver_mods.brd